NEED	○	·	PURCHASING SPECIFICATION	·	REQUEST FOR APPROVAL	·	DELIVERY DRAWING	·	INSPECTING STANDARD	·	QC-PROCESS

GEN. TOL.	DRAFT ANG.	OUTSIDE	INSIDE
		2/100	3/100
		3/100	

CAST WALL THICK	NOMINAL DIM. DIVISION	5 MAX	5 TO = 10	10 TO = 18	18 TO = 30	30 TO = 50
	SANDMOLD	±1.0	±1.5	±2.0	±3.0	±3.5
	SHELL	±0.8	±1.0	±1.5	±2.0	±2.0

L-CAST	120 MAX	120 TO = 250	250 TO = 400	400 TO = 800	800 TO = 1600	1600 TO = 3150
	±1.5	±2.0	±3.0	±4.0	±5.0	±7.0
	±1.0	±1.5	±2.0	±3.0	±4.0	±6.0

L-CHIP					
0.5 TO = 6	±0.1	400 TO =1000	±0.8
6 TO = 30	±0.2	1000 TO =2000	±1.2
30 TO =120	±0.3	2000 TO =4000	±2.0
120 TO =400	±0.5		

ANG.-CHIP		
	10 MAX	±1DEG.
10 TO = 50		±30MIN.
50 TO =120		±20MIN.
120 TO =400		±10MIN.
400 MIN		± 5MIN.

FIGURE DIMENSION | GT.CODE | ○ AND/OR RADIAL

3RD ANGLE PROJECTION

CAREER

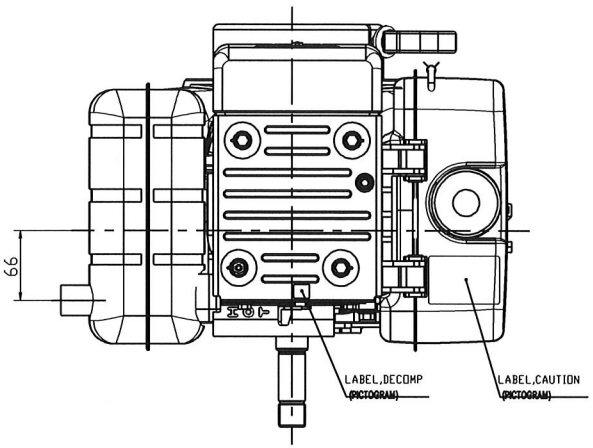

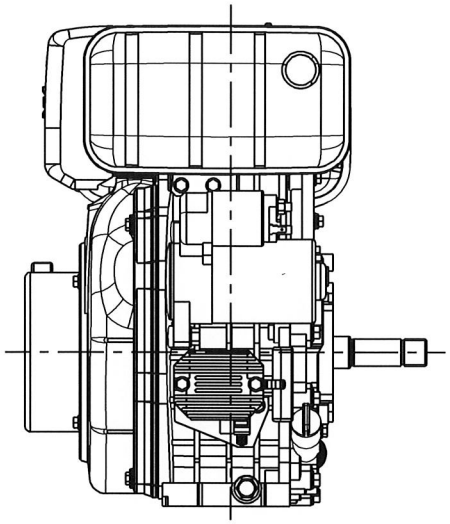

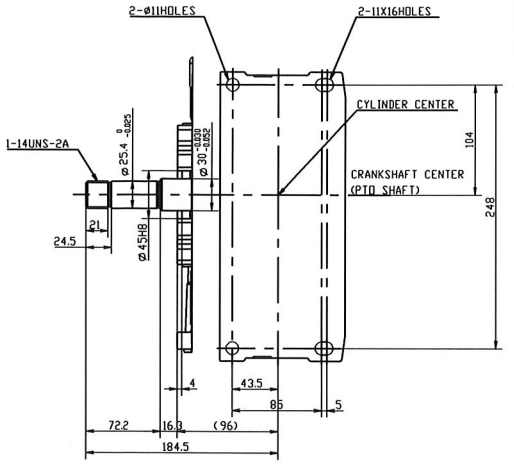

ENGINE MOUNTING PLATE AND PTO SHAFT
SEEN THROUGH FROM THE TOP OF THIS ENGINE

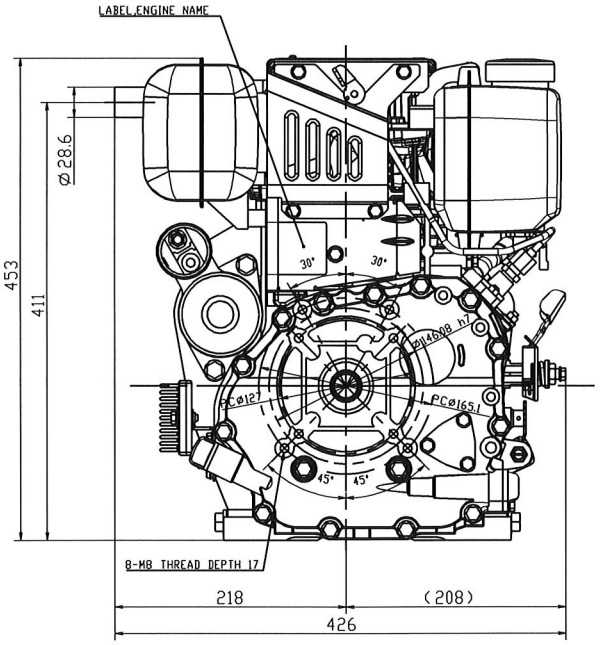

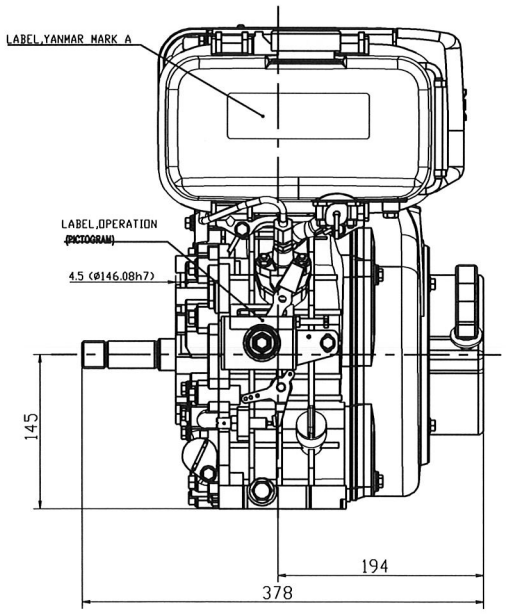

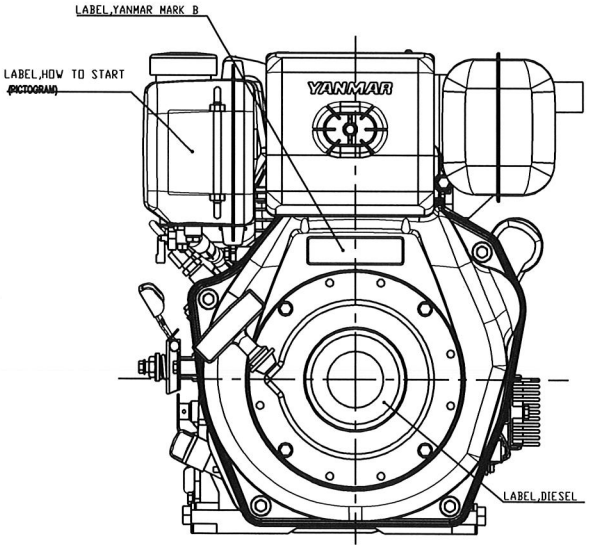

With respect to the use of environmentally hazardous substances for the parts, the substances in use shall conform to the requirement specified in YIS V-0001J, "Restrictions of use for Environmentally Hazardous Substances".

3D-CAD

NOTICE

GEOMETRICAL TOLERANCE

KIND OF TOLERANCE	SYMBOL
FORM: STRAIGHTNESS TOLERANCE	
FORM: CIRCULARITY TOLERANCE	○
FORM: PROFILE OF LINE TOLERANCE	
FORM: FLATNESS TOLERANCE	
FORM: CYLINDRICITY TOLERANCE	
FORM: PROFILE OF SURFACE	
ORIENTATION: PARALLELISM TOLERANCE	//
ORIENTATION: PERPENDICULARITY TOLERANCE	⊥
ORIENTATION: ANGULARITY TOLERANCE	∠
LOCATION: POSITIONAL TOLERANCE	⌖
LOCATION: CONCENTRICITY TOLERANCE	◎
LOCATION: SYMMETRY TOLERANCE	⌯
RUN-OUT: CIRCULAR TOLERANCE	↗
RUN-OUT: TOTAL RUN-OUT TOLERANCE	⌰

WEIGHT (RAW)	(± %) kg			
WEIGHT (CALC.)	(± %) kg			
S.ENGINEER	MANAGER	MODEL		
CHECKED	SPECIALIST	QTY		
DESIGNED R. Mumkami	DRAWN H. Ogawa	DATE:Y.M.D 28 MAY. 2010	NAME	OUTLINE L70N5-PETMYI OUTLINE

?	C.MANAGER	S.MANAGER
?		
?		
?		
?		
?	SCALE	FREE
	MATERIAL	

YANMAR
POWER SYSTEM OPERATIONS DIV., YANMAR CO., LTD.

CODE B2-14820-0230 | DRAW SIZE A1