NEED	○	·	PURCHASING SPECIFICATION	·	REQUEST FOR APPROVAL	·	DELIVERY DRAWING	·	INSPECTING STANDARD	·	QC-PROCESS

GEN. TOL.	DRAFT ANG.	OUTSIDE	INSIDE
		2/100	3/100
		3/100	

CAST WALL THICK	NOMINAL DIM.	5 MAX	5 TO = 10	10 TO = 18	18 TO = 30	30 TO = 50
	DIVISION					
	SANDMOLD	±1.0	±1.5	±2.0	±3.0	±3.5
	SHELL	±0.8	±1.0	±1.5	±2.0	±2.0

L-CAST	120 MAX	120 TO = 250	250 TO = 400	400 TO = 800	800 TO = 1600	1600 TO = 3150
	±1.5	±2.0	±3.0	±4.0	±5.0	±7.0
	±1.0	±1.5	±2.0	±3.0	±4.0	±6.0

L-CHIP	0.5 TO = 6	±0.1	400 TO =1000	±0.8
	6 TO = 30	±0.2	1000 TO =2000	±1.2
	30 TO =120	±0.3	2000 TO =4000	±2.0
	120 TO =400	±0.5		

ANG-CHIP	10 MAX	±1DEG.
	10 TO = 50	±30MIN.
	50 TO =120	±20MIN.
	120 TO =400	±10MIN.
	400 MIN	± 5MIN.

FIGURE DIMENSION | GT.CODE | ○ AND/OR RADIAL

3RD ANGLE PROJECTION

CAREER

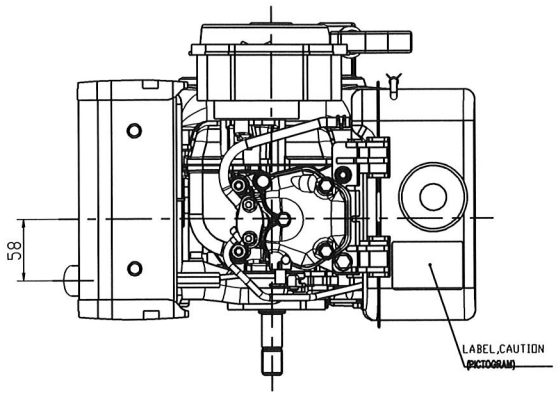

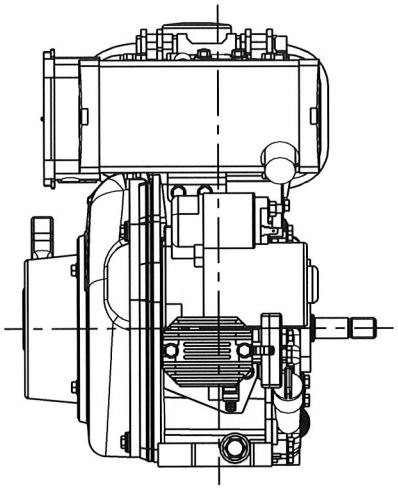

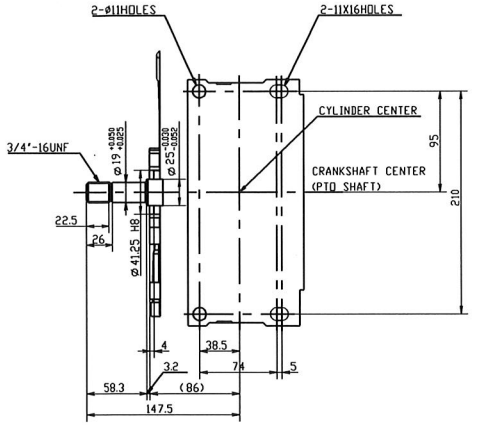

ENGINE MOUNTING PLATE AND PTO SHAFT
SEEN THROUGH FROM THE TOP OF THIS ENGINE

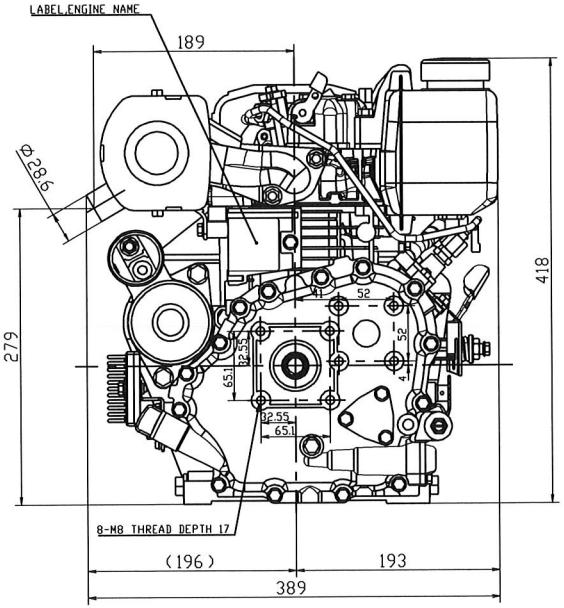

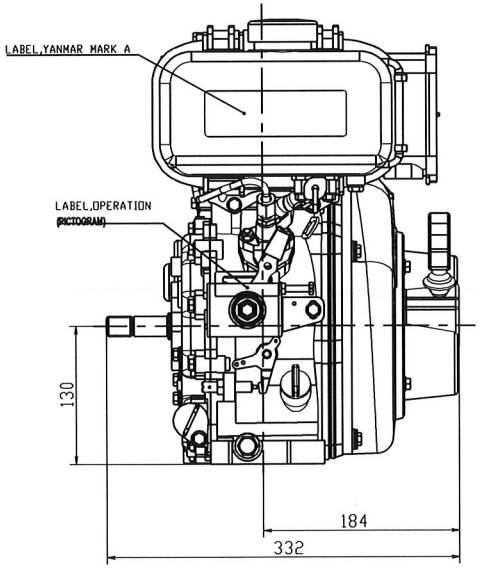

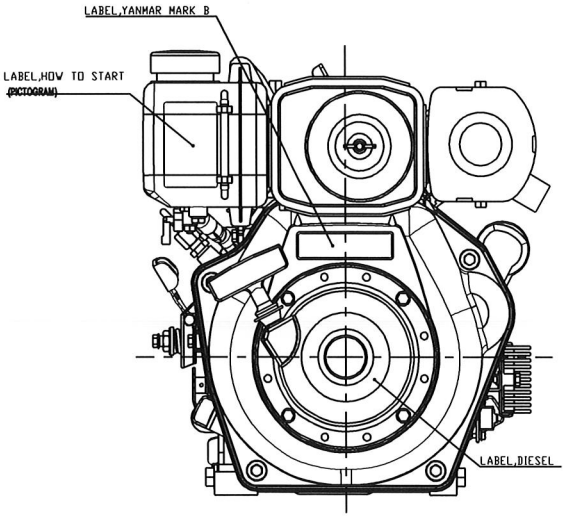

With respect to the use of environmentally hazardous substances for the parts, the substances in use shall conform to the requirement specified in TIS V-0001J, "Restrictions of use for Environmentally Hazardous Substances".

3D-CAD

NOTICE

GEOMETRICAL TOLERANCE

KIND OF TOLERANCE		SYMBOL
FORM	STRAIGHTNESS TOLERANCE	—
	DECLARITY TOLERANCE	○
	PROFILE OF LINE TOLERANCE	⌒
	FLATNESS TOLERANCE	▱
	PLUMBICITY TOLERANCE	⌭
	PROFILE TOLERANCE OF SURFACE	⌓
ORIENTATION	PARALLELISM TOLERANCE	//
	EXPONDICULARITY TOLERANCE	⊥
	ANGULARITY TOLERANCE	∠
LOCATION	POSITIONAL TOLERANCE	⌖
	SOCIALITY OR SOCIETIONICITY TOLERANCE	◎
	TYPICITY TOLERANCE	⌯
RUN-OUT	DECIMAL RUN-OUT TOLERANCE	↗
	TOTAL RUN-OUT TOLERANCE	⌰

WEIGHT (RAW)	kg (± %)			? C.MANAGER	S.MANAGER
WEIGHT (CALC.)	kg (± %)			?	
S.ENGINEER	MANAGER	MODEL		? SCALE	FREE
CHECKED	SPECIALIST	QTY		MATERIAL	
			OUTLINE		
DESIGNED R. Mumkani	DRAWN H. Ogawa	DATE:Y.M.D 03 JUN. 2010	NAME	L48N6-PETMYI OUTLINE	
YANMAR POWER SYSTEM OPERATIONS DIV., YANMAR CO., LTD.			CODE	B2-14720-0260	DRAW SIZE A1