NEED	PURCHASING SPECIFICATION	REQUEST FOR APPROVAL	DELIVERY DRAWING	INSPECTING STANDARD	QC-PROCESS
○					

GEN. TOL.	DRAFT ANG.	CAST WALL THICK	OUTSIDE	INSIDE
			2/100	3/100
			3/100	

CAST WALL THICK	NOMINAL DIA.	5 MAX	5 TO = 10	10 TO = 18	18 TO = 30	30 TO = 50
	DIVISION					
	SANDHOLD	±1.0	±1.5	±2.0	±3.0	±3.5
	SHELL	±0.8	±1.0	±1.5	±2.0	±2.0

L-CAST	120 MAX	120 TO = 250	250 TO = 400	400 TO = 800	800 TO = 1600	1600 TO = 3150
	±1.5	±2.0	±3.0	±4.0	±5.0	±7.0
	±1.0	±1.5	±2.0	±3.0	±4.0	±6.0

L-CHIP	0.5 TO = 6	±0.1	400 TO =1000	±0.8
	6 TO = 30	±0.2	1000 TO =2000	±1.2
	30 TO =120	±0.3	2000 TO =4000	±2.0
	120 TO =400	±0.5		

ANG-CHIP	10 MAX	±1DEG.
	10 TO = 50	±30MIN.
	50 TO =120	±20MIN.
	120 TO =400	±10MIN.
	400 MIN	± 5MIN.

FIGURE DIMENSION | GT.CODE | ○ AND/OR RADIAL

3RD ANGLE PROJECTION

CAREER

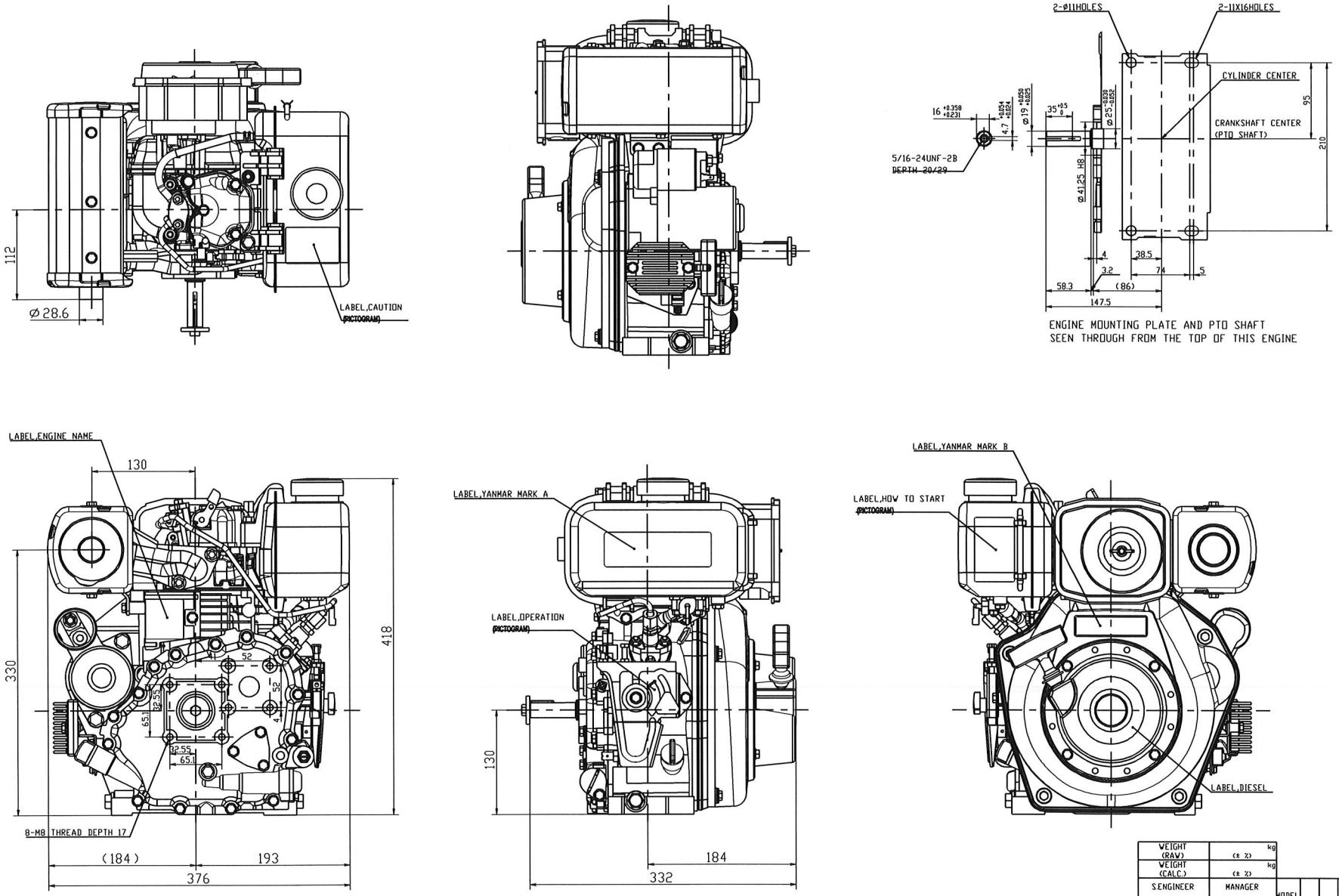

ENGINE MOUNTING PLATE AND PTO SHAFT
SEEN THROUGH FROM THE TOP OF THIS ENGINE

With respect to the use of environmentally hazardous substances for the parts, the substances in use shall conform to the requirement specified in YIS V-0001J, "Restrictions of use for Environmentally Hazardous Substances".

3D-CAD

NOTICE

GEOMETRICAL TOLERANCE

KIND OF TOLERANCE	SYMBOL
FORM: STRAIGHTNESS TOLERANCE	
FORM: CIRCULARITY TOLERANCE	○
FORM: PROFILE OF LINE TOLERANCE	⌒
FORM: FLATNESS TOLERANCE	⏥
FORM: CYLINDRICITY TOLERANCE	⌭
FORM: PROFILE OF SURFACE	⌓
ORIENTATION: PARALLELISM TOLERANCE	//
ORIENTATION: PERPENDICULARITY TOLERANCE	⊥
ORIENTATION: ANGULARITY TOLERANCE	∠
LOCATION: POSITIONAL TOLERANCE	⌖
LOCATION: CONCENTRICITY OR SYMMETRICITY TOLERANCE	◎
LOCATION: SYMMETRY TOLERANCE	⌯
RUN-OUT: CIRCULAR RUN-OUT TOLERANCE	↗
RUN-OUT: TOTAL RUN-OUT TOLERANCE	⌰

WEIGHT (RAW)	kg (± %)		
WEIGHT (CALC.)	kg (± %)		
S.ENGINEER	MANAGER	MODEL	
CHECKED	SPECIALIST	QTY	
DESIGNED: R. Mumkami	DRAWN: H. Ogawa	DATE: Y.M.D 01 JUN. 2010	NAME: OUTLINE L48N5-METMRYI OUTLINE

? C.MANAGER | S.MANAGER
? ? ? ? ?
? SCALE: FREE
MATERIAL

YANMAR
POWER SYSTEM OPERATIONS DIV., YANMAR CO., LTD.

CODE: B2-14720-0200 | DRAW SIZE: A1