NEED	◯	PURCHASING SPECIFICATION	·	REQUEST FOR APPROVAL	·	DELIVERY DRAWING	·	INSPECTING STANDARD	·	QC-PROCESS

3RD ANGLE PROJECTION

C A R E E R

ISSUE THE DRAWING FOR MASS PRODUCTION. (YDSBD-05003)
REV.1(24th.May.2005)
CHANGE THE PIPING OF CSW
BY CHANGING TO THE CAC OF MOTA
(YDSBD-05004)(NISHINO)

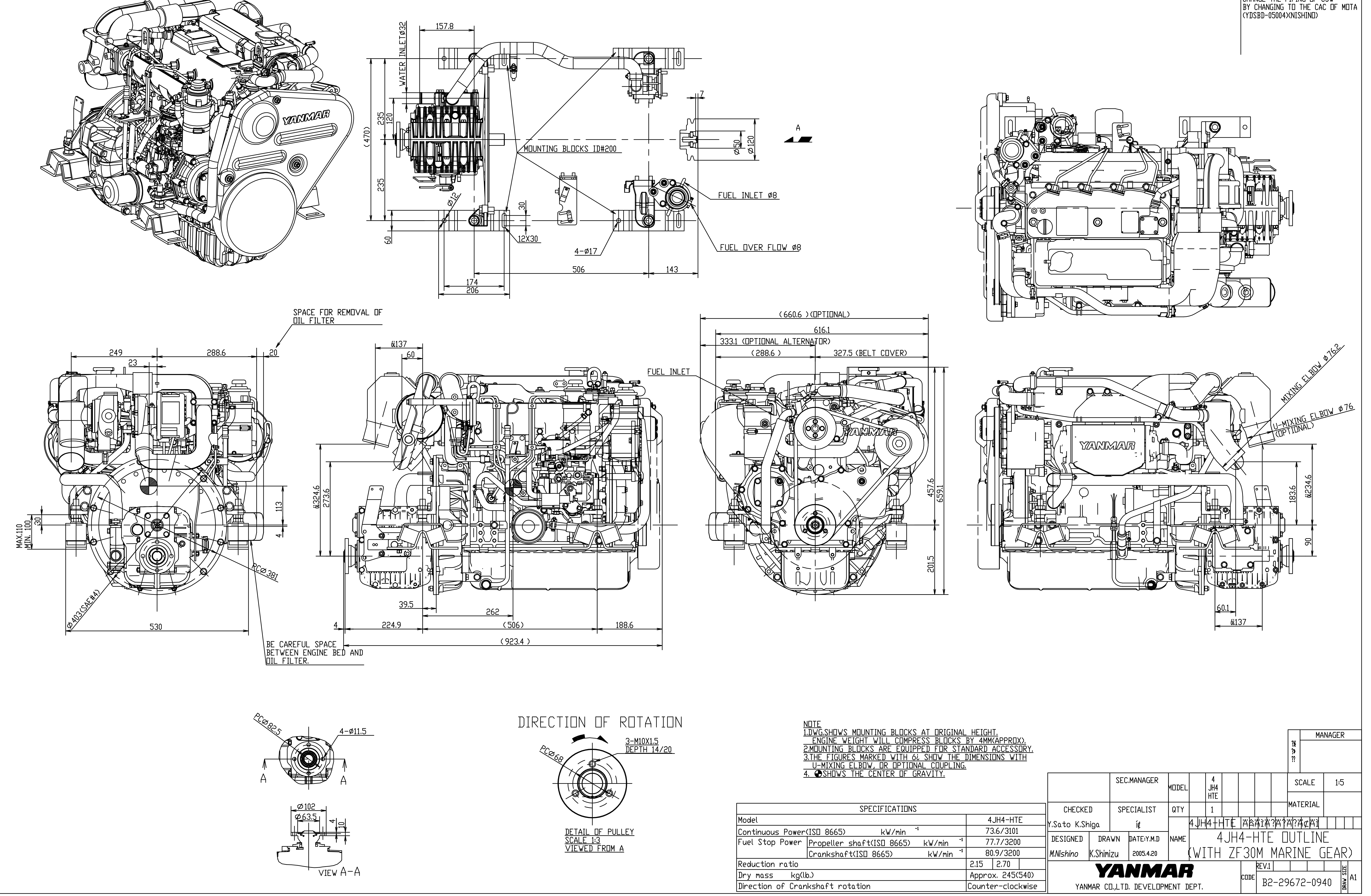

NOTE
1.DWG.SHOWS MOUNTING BLOCKS AT ORIGINAL HEIGHT.
ENGINE WEIGHT WILL COMPRESS BLOCKS BY 4MM(APPROX).
2.MOUNTING BLOCKS ARE EQUIPPED FOR STANDARD ACCESSORY.
3.THE FIGURES MARKED WITH ōĭ SHOW THE DIMENSIONS WITH
U-MIXING ELBOW, OR OPTIONAL COUPLING.
4. ◐SHOWS THE CENTER OF GRAVITY.

SPECIFICATIONS			
Model			4JH4-HTE
Continuous Power(ISO 8665)		kW/min⁻¹	73.6/3101
Fuel Stop Power	Propeller shaft(ISO 8665)	kW/min⁻¹	77.7/3200
	Crankshaft(ISO 8665)	kW/min⁻¹	80.9/3200
Reduction ratio			2.15 / 2.70
Dry mass kg(lb.)			Approx. 245(540)
Direction of Crankshaft rotation			Counter-clockwise

	SEC.MANAGER	MODEL	4 JH4 HTE	SCALE	1:5
CHECKED	SPECIALIST	QTY	1	MATERIAL	
Y.Sato K.Shiga	ı¢		4JH4-HTE ÁÅÃÍÂ?ÁºÂ?Á¢Áî		
DESIGNED / M.Nishino	DRAWN / K.Shimizu	DATE:Y.M.D / 2005.4.20	NAME	4JH4-HTE OUTLINE (WITH ZF30M MARINE GEAR)	
YANMAR	YANMAR CO.,LTD. DEVELOPMENT DEPT.	CODE	REV.1	B2-29672-0940	DRAW SIZE A1

MANAGER

3D-CAD

NOTICE

KIND OF TOLERANCE		SYMBOL
FORM	STRAIGHTNESS TOLERANCE	—
	CIRCULARITY TOLERANCE	○
	PROFILE OF LINE TOLERANCE	⌒
	FLATNESS TOLERANCE	▱
	CYLINDRICITY TOLERANCE	⌭
	PROFILE TOLERANCE OF SURFACE	⌓
ORIENTATION	PARALLELISM TOLERANCE	//
	PERPENDICULARITY TOLERANCE	⊥
	ANGULARITY TOLERANCE	∠
LOCATION	POSITIONAL TOLERANCE	⊕
	COAXIALITY OR CONCENTRICITY TOLERANCE	◎
	SYMMETRY TOLERANCE	⌯
RUN-OUT	CIRCULAR RUN-OUT TOLERANCE	↗
	TOTAL RUN-OUT TOLERANCE	⌰