NEED	PURCHASING SPECIFICATION	REQUEST FOR APPROVAL	DELIVERY DRAWING	INSPECTING STANDARD	QC-PROCESS

3RD ANGLE PROJECTION

FIGURE DIMENSION | GT.CODE | ○ AND ⌀ :RADIAL

C A R E E R

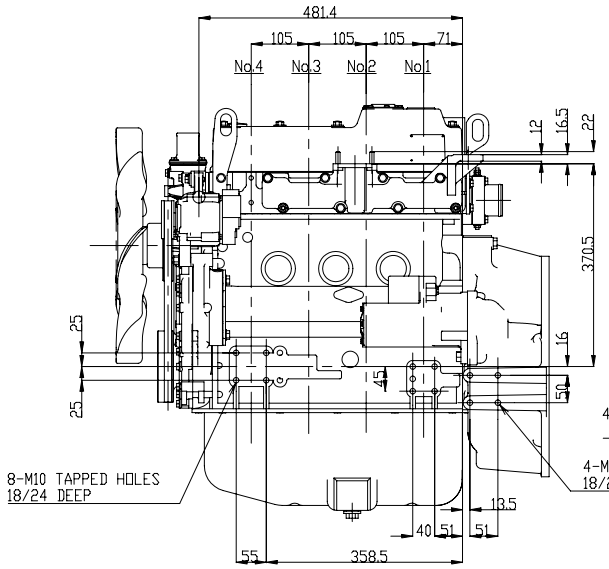

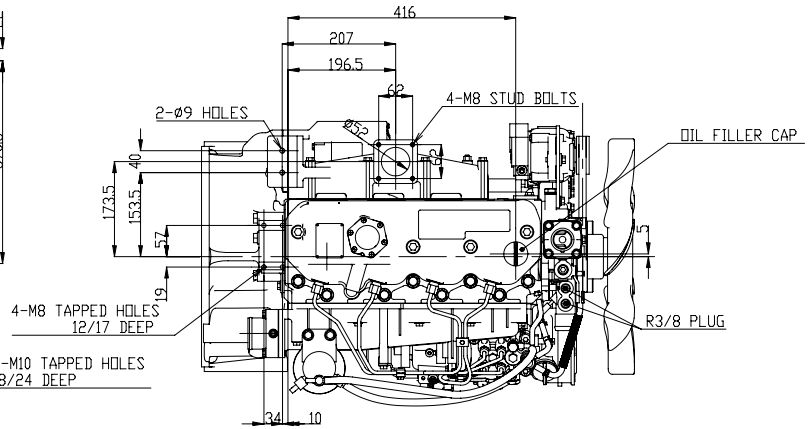

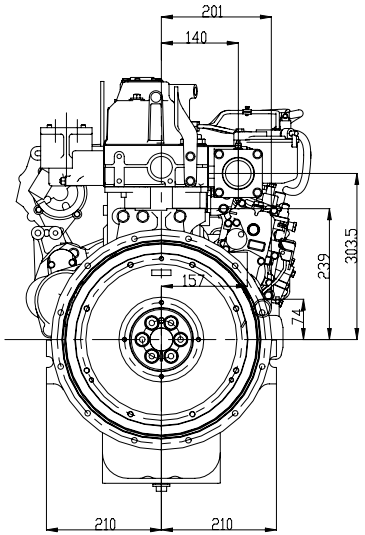

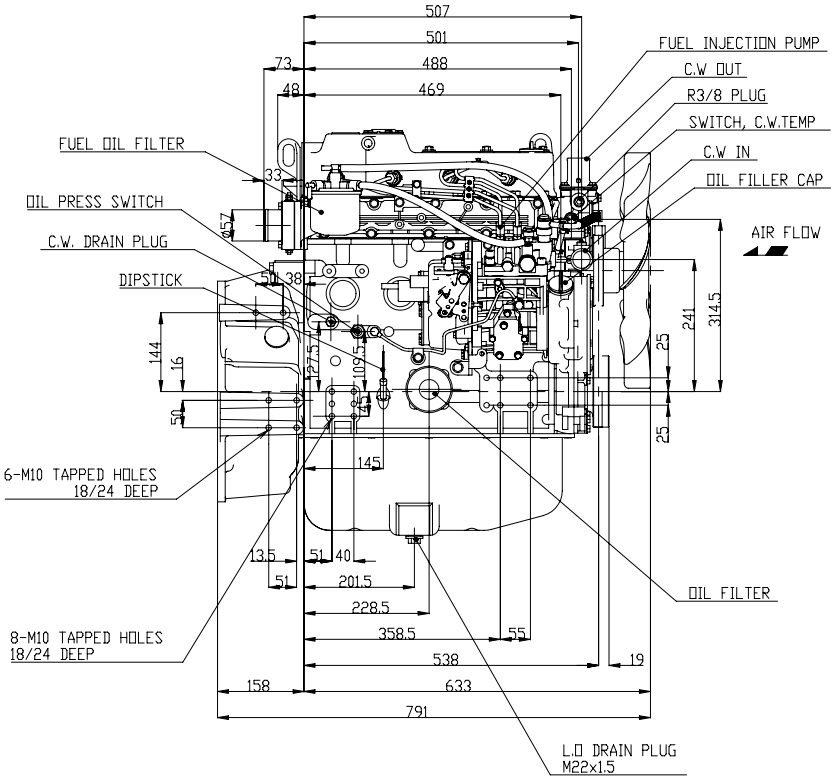

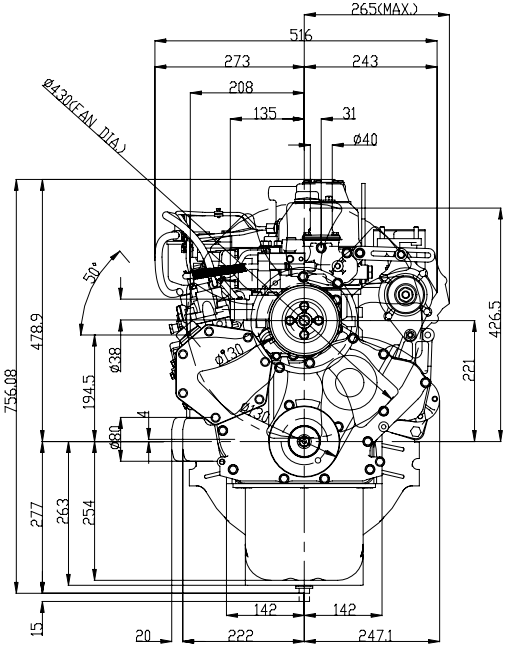

WEIGHT (RAW)	kg (± %)								
WEIGHT (CALC.)	0.000 kg (± %)								
	SEC.MANAGER	MODEL	4TNV 98 -NSA					SCALE	1:5
CHECKED	SPECIALIST	QTY	1					MATERIAL	——
DESIGNED K.Nomura	DRAWN E.Adachi	DATE:Y.M.D 2003. 5.12	NAME	OUTLINE					

G.MANAGER	MANAGER

YANMAR

YANMAR CO.,LTD. ENGINE PRODUCT OPERATIONS DIV.

CODE B3-29907-0070 DRAW SIZE A1

3D-CAD

NOTICE

GEOMETRICAL TOLERANCE

KINDS OF TOLERANCE	SYMBOL
FORM: STRAIGHTNESS TOLERANCE	—
FORM: CIRCULARITY TOLERANCE	○
FORM: PROFILE OF LINE TOLERANCE	⌒
FORM: FLATNESS TOLERANCE	▱
FORM: CYLINDRICITY TOLERANCE	⌭
FORM: PROFILE TOLERANCE OF SURFACE	⌓
ORIENTATION: PARALLELISM TOLERANCE	//
ORIENTATION: PERPENDICULARITY TOLERANCE	⊥
ORIENTATION: ANGULARITY TOLERANCE	∠
LOCATION: POSITIONAL TOLERANCE	⌖
LOCATION: COAXIALITY OF CONCENTRICITY TOLERANCE	◎
LOCATION: SYMMETRY TOLERANCE	⌯
RUN-OUT: CIRCULAR RUN-OUT TOLERANCE	↗
RUN-OUT: TOTAL RUN-OUT TOLERANCE	⌰