Property of Yanmar Marine International (All rights reserved).

DETAIL OF COUPLING

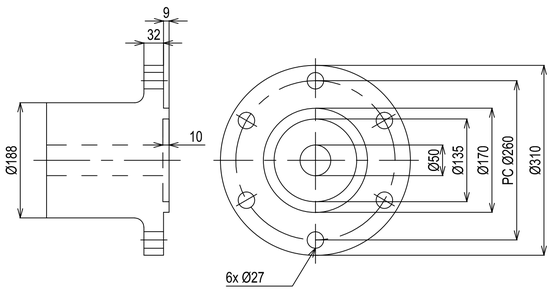


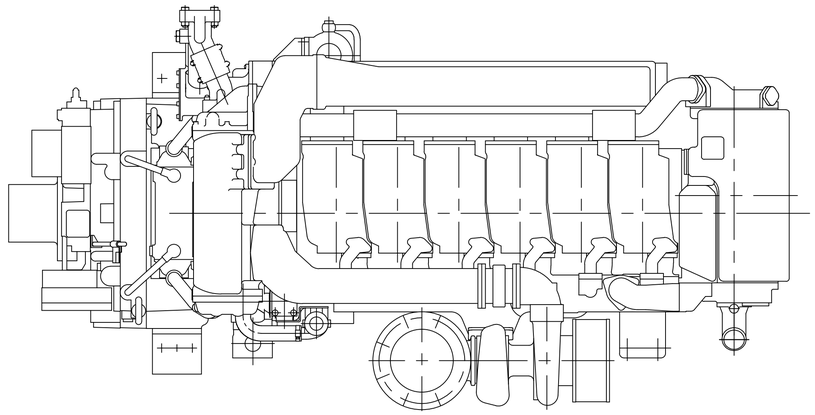

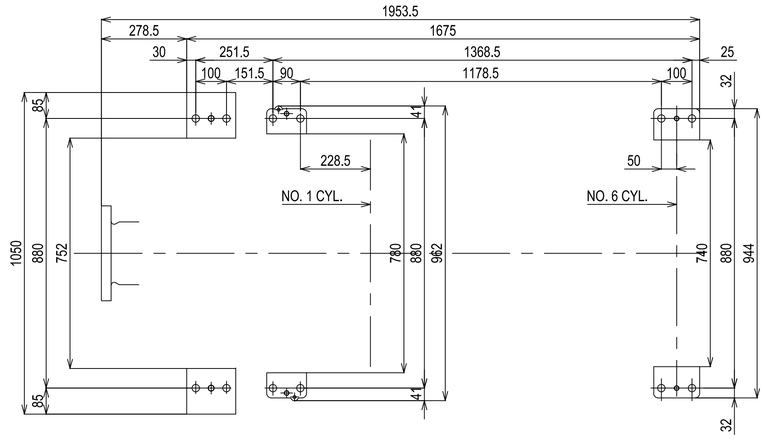


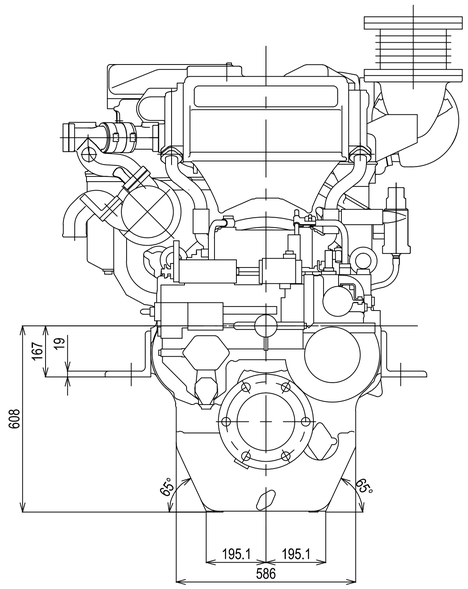


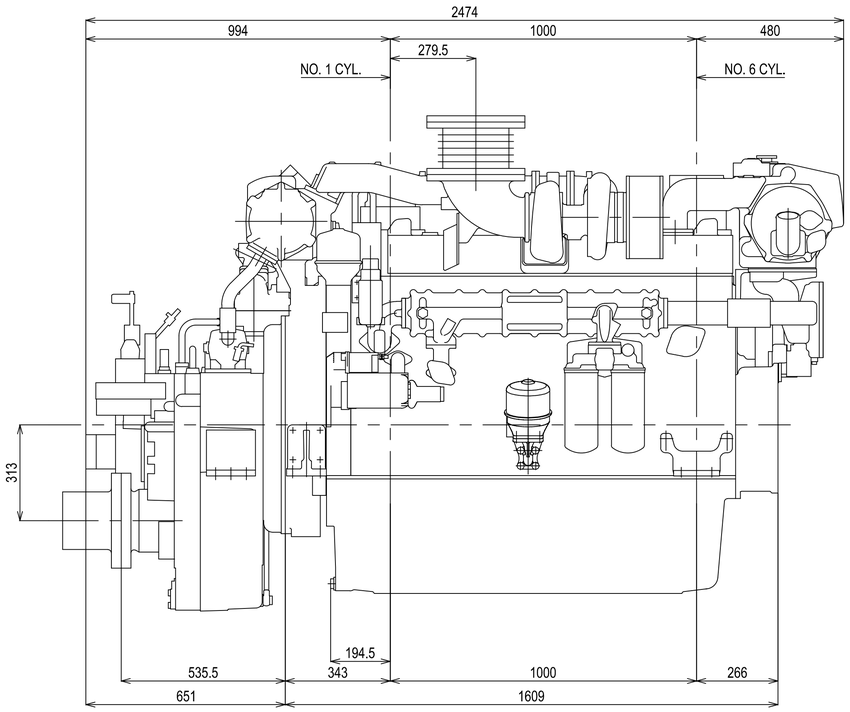


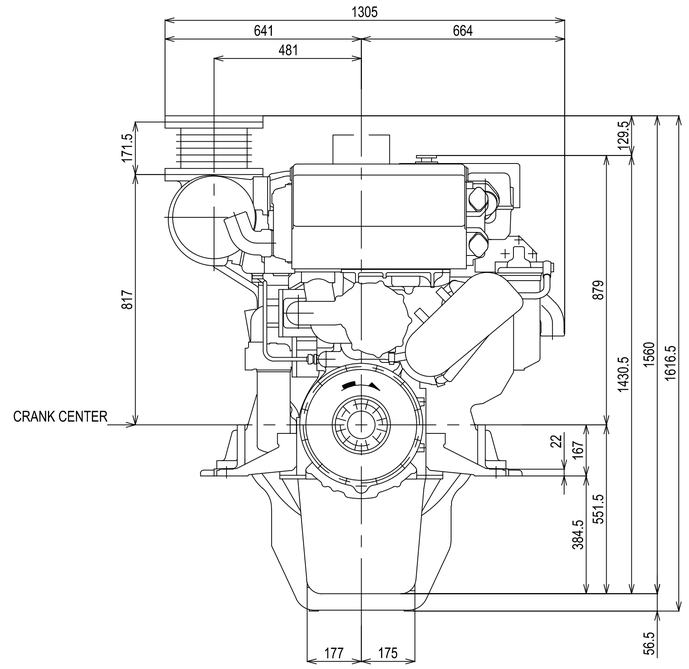


DETAIL OF MOUNTING BLOCK

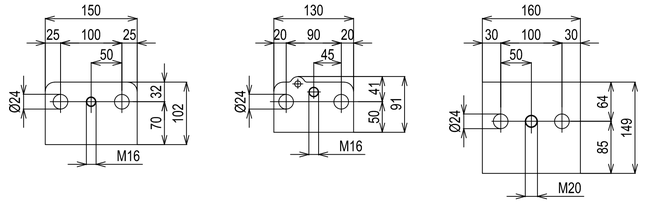


| | | | |
|---|---|---|---|
| Series: 6AY | Engine: 6AYM-WETxYXH240 | Release: R2011-1 | |
| Scale: 1:10 (1:5) | Date: 01-01-2011 | Dimensions: mm | |

YANMAR