Property of Yanmar Marine International (All rights reserved).

DETAIL OF FLYWHEEL

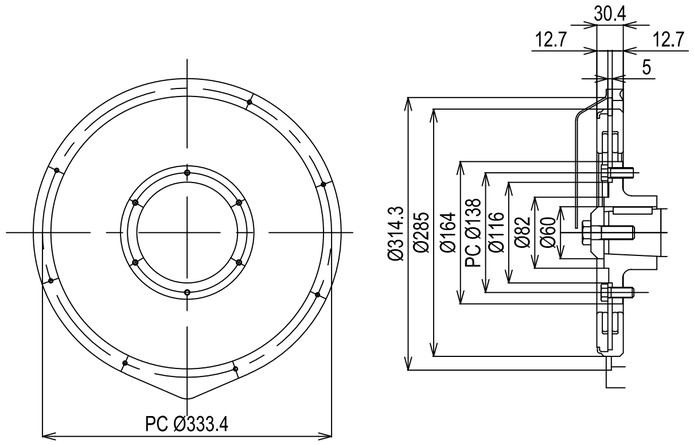

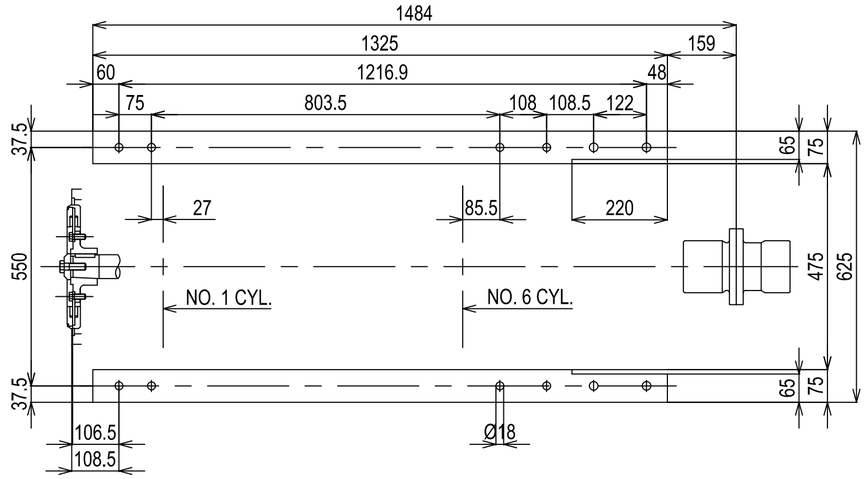

DETAIL OF COUPLING

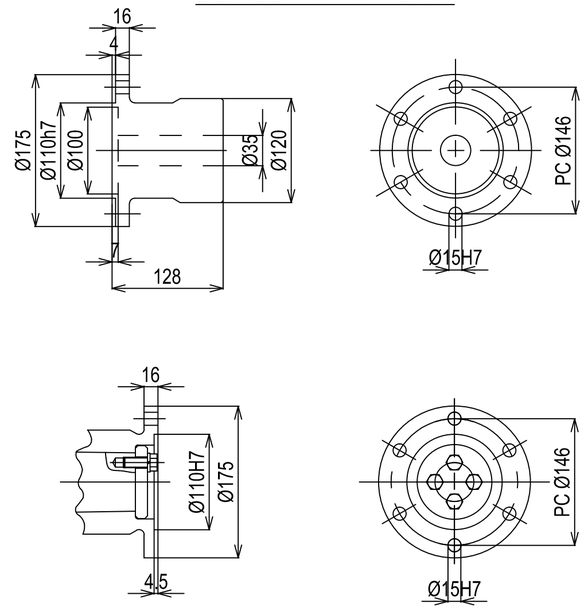

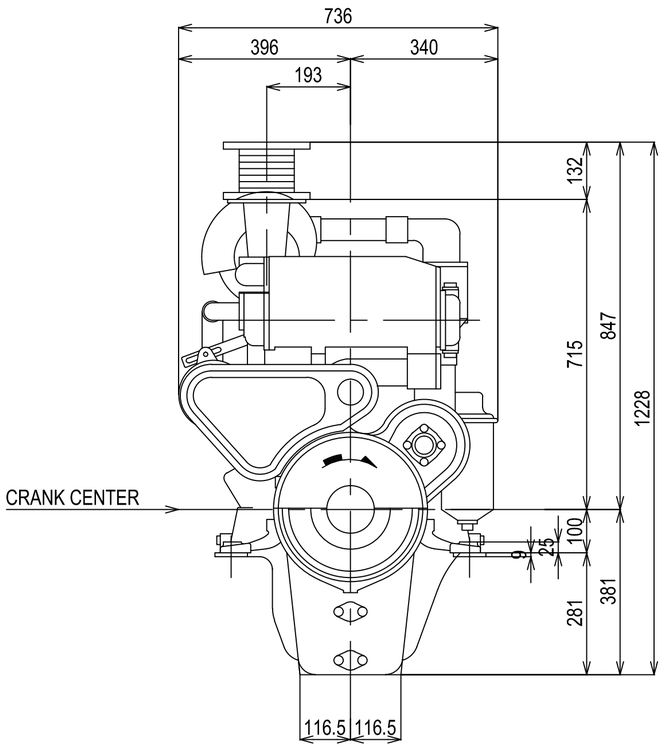

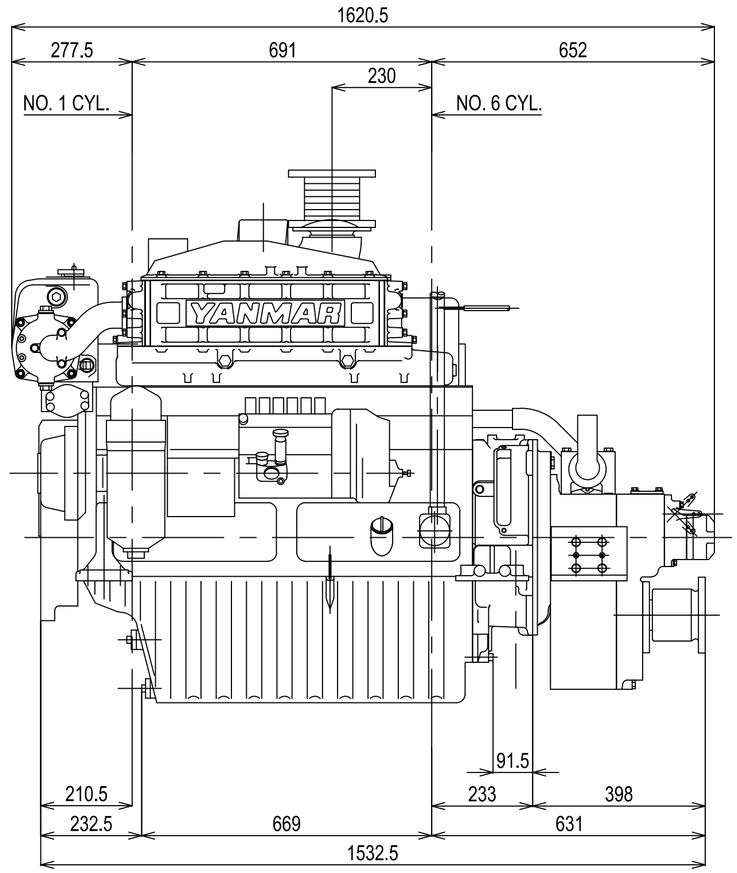

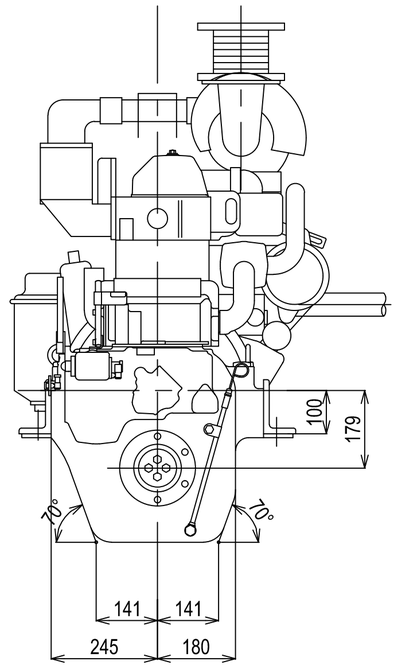

Serie:	6CH3	Engine:	6CH-WDTxYX-71-4	Release:	R2011-1
Scale:	1:10 (1:5)	Date:	01-01-2011	Dimensions:	mm

YANMAR