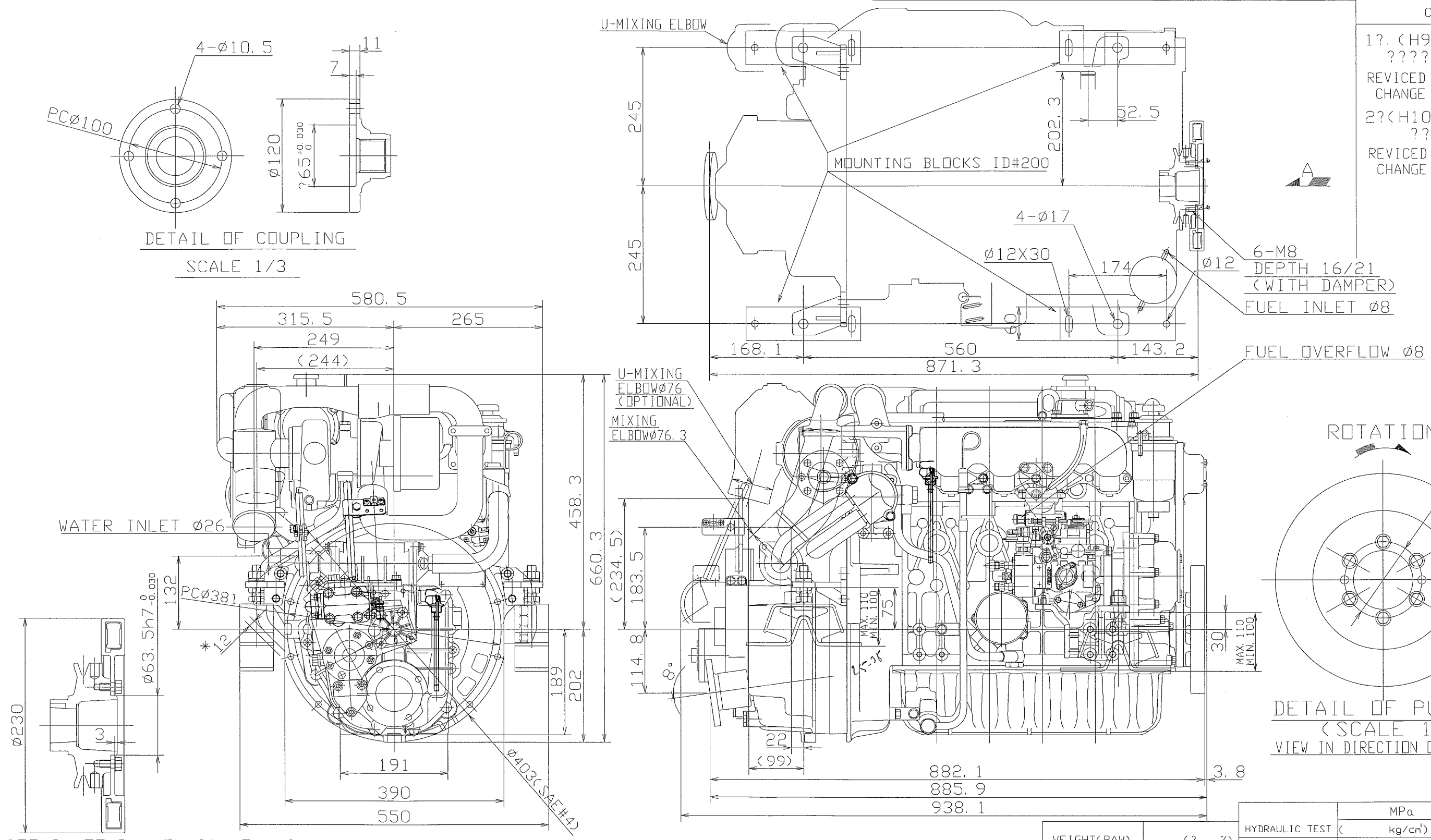

NOTE

1. DWG. SHOWS MOUNTING BLOCKS AT ORIGINAL HEIGHT. ENGINE WEIGHT WILL COMPRESS BLOCKS BY 4MM(APPROX).
2. WHEN DESIGNING ENGINE BED, CONSIDER THE CLEARANCE BETWEEN L.O. RETURN PIPE AND ENGINE BED, SHOWN BY *. THE FIGURE 12MM SHOWS CLEARANCE AT THE MIDDLE HEIGHT OF MOUNTING BLOCKS, AND MINIMUM CLEARANCE IS 8MM.

SPECIFICATIONS				
Model			4JH3-DTE	
Cont?nuous rat?ng out?ut	(ISO 3046)	HP/r?m(kW)	ⓔ116/3700 (85.3)	
Max?mum	Pro?eller shaft out?ut(ISO 3046)	HP/r?m(kW)	120/3800 (88.3)	
	Crankshaft out?ut (ISO 3046)	HP/r?m(kW)	125/3800 (91.9)	
Reduct?on rat?o			2.04	2.45
Dry we?ght		kg(lb.)	A??rox. 260(573)	
D?rect?on of ?ro?. shaft rotat?on			Bi-Rotation	

HYDRAULIC TEST	MPa (kg/cm²)	G. MANAGER	? ? ? MANAGER		
PNEUMATIC TEST	MPa (kg/cm²)		木伏		
WEIGHT(RAW)	(? %)				
WEIGHT(??%)	(? %)				
SEC. MANAGER 山		MODEL	4JH3-DTE	SCALE	1/5 (1/3)
CHECKED 佐藤	SPECIALIST	QTY.		MATERIAL	
DESIGNED [redacted]	DRAWN [redacted]	DATE 1997 7.24	NAME	4JH3-DTE OUTLINE (WITH KMH4A MARINE GEAR)	
			CODE	1?2? B2-29673-0170	

CAREER

1?.(H9.11.29) ????-?-???????

REVICED 1.(29/11/'97) CHANGE OIL COOLER

2?(H10.4.10)???? ???FW??Æ??½U

REVICED 2.(10/4/'98) CHANGE TO FW OUT