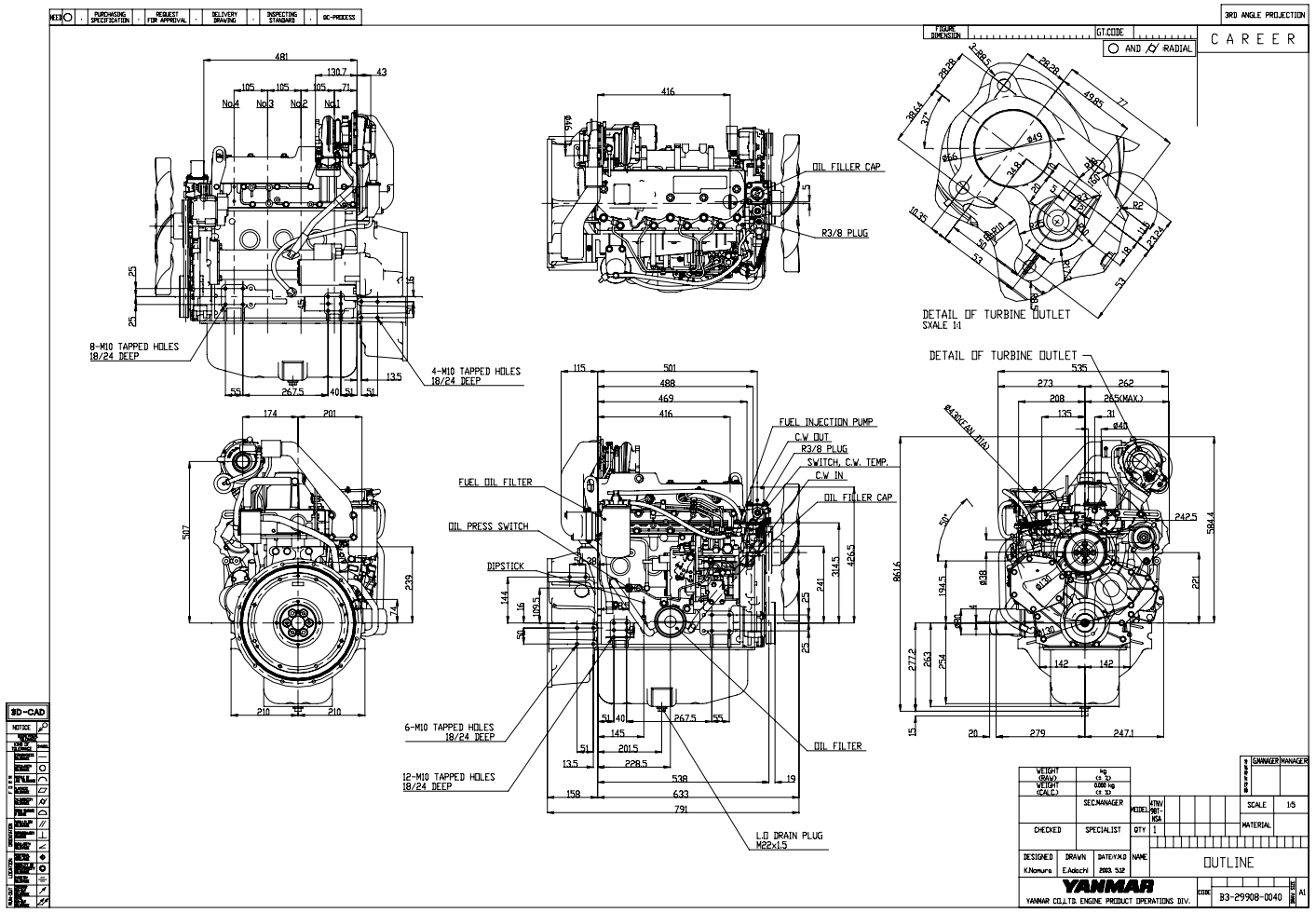
3RD ANGLE PROJECTION
CAREER
FIGURE DIMENSION
GT.CODE
AND RADIAL
8-M10 TAPPED HOLES 18/24 DEEP
4-M10 TAPPED HOLES 18/24 DEEP
OIL FILLER CAP
R3/8 PLUG
DETAIL OF TURBINE OUTLET
SCALE 1:1
FUEL INJECTION PUMP
C.W OUT
R3/8 PLUG
SWITCH, C.W. TEMP.
C.W IN
OIL FILLER CAP
FUEL OIL FILTER
OIL PRESS SWITCH
DIPSTICK
6-M10 TAPPED HOLES 18/24 DEEP
12-M10 TAPPED HOLES 18/24 DEEP
OIL FILTER
L.O DRAIN PLUG M22x1.5
WEIGHT (DRAW.) kg
WEIGHT (CALC.) kg
SEC.MANAGER
CHECKED
SPECIALIST
MODEL 4TNV 94T-NSA
QTY 1
SCALE 1:5
MATERIAL
DESIGNED K.Nomura
DRAWN E.Adachi
DATE Y.M.D 2003.5.12
NAME OUTLINE
YANMAR
YANMAR CO.,LTD. ENGINE PRODUCT OPERATIONS DIV.
CODE B3-29908-0040
SIZE A1
3D-CAD